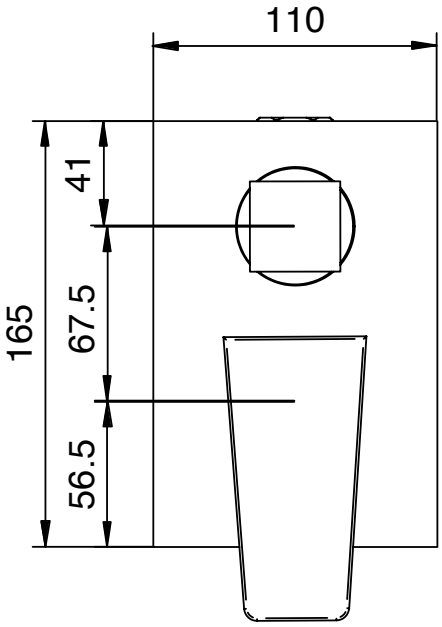
110
41
67.5
56.5
165

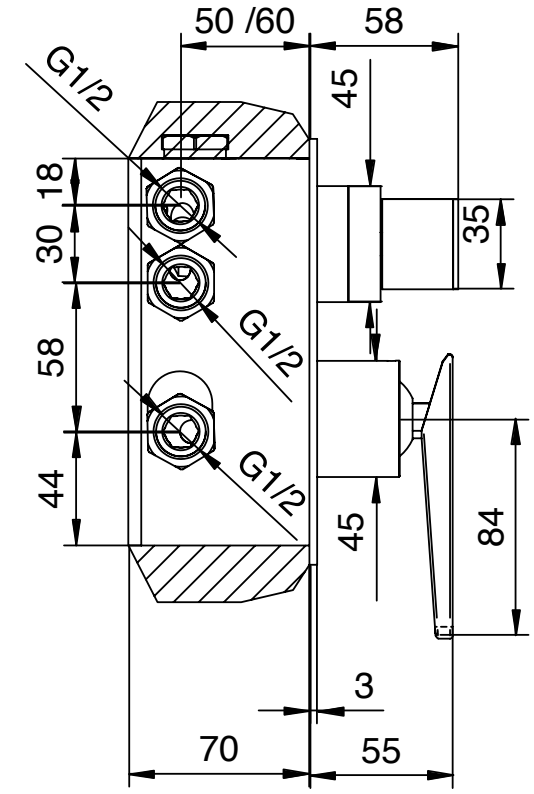
50 /60
58
G1/2
45
18
30
35
G1/2
58
G1/2
44
45
84
3
70
55

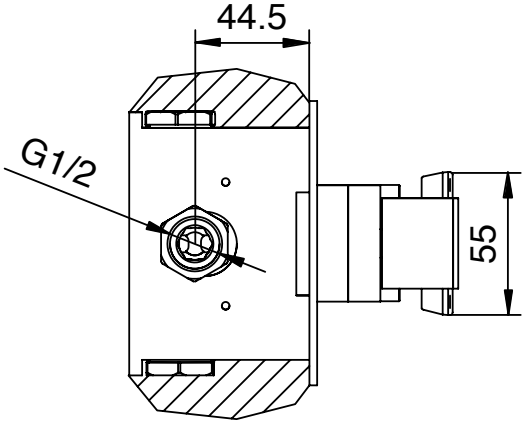
44.5
G1/2
55