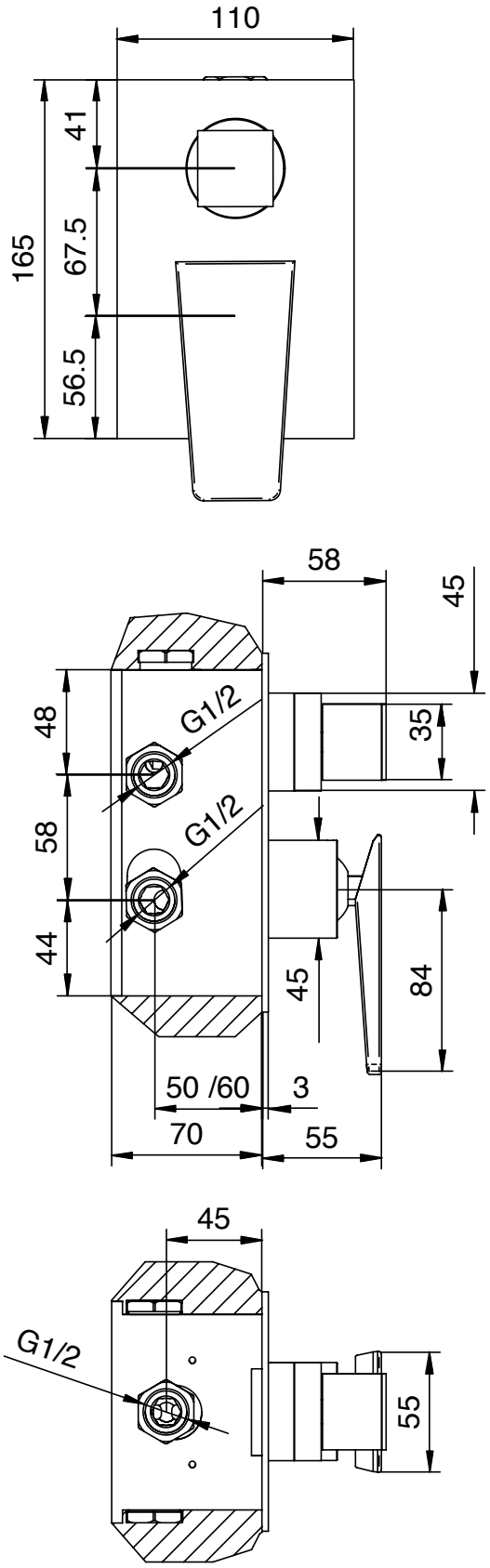
110
165
41
67.5
56.5
58
45
48
G1/2
35
58
G1/2
44
45
84
50 /60
3
70
55
45
G1/2
55